TIME MODULE

Watch Movement Specification and Drawing

Standard Mechanical Movement

NH35A

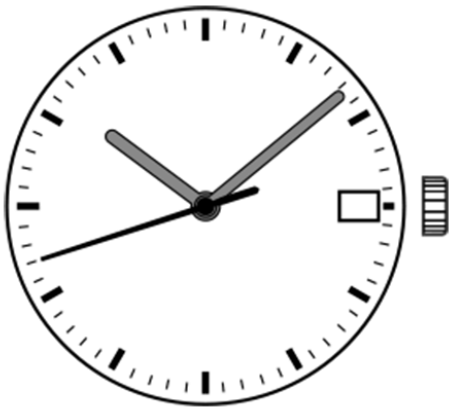

Movement Size: **12‴**

Diameter: **Φ27.40mm** (Φ29.36mm with Dial Holding Spacer)

Height: **5.32mm**

Items	Ver.	Items	Ver.
Specification	1		
Appearance - 1	1		
Appearance - 2	1		
Casing	1		
Hand Fitting	1		
Hand Setting Stem	1		
Dial - 1	1		
Dial - 2	1		
Assembly Plan	1		
Hands	1		

Revised on : 16112022

Specification

NH35A

CAL.NH35A 12 Ligne Mechanical Movement

Three Hands with Date

1. FUNCTION

· Jewel	24 jewels	
· Accuracy	-20 ~ +40 seconds / day (23 ± 2 ℃)	
· Regulation hands unbalance	Hour hand	: Less than 1.50 μN·m (150 mg·mm)
	Minute hand	: Less than 1.25 μN·m (125 mg·mm)
	Second hand	: Less than 0.60 μN·m (60 mg·mm)
· Additional function	Manual winding	
	Automatic winding with ball bearing	
	Both winding with one way clutch	
	Second hand stop mechanism	
	Date display with quick date correction	

2. USE AND TEST CONDITION

· Vibration frequency	21,600 vibrations per hour	
· Duration time	More than 41 hours	
· Antimagnetic	≧4800 A / m	(Direct current magnetic field)
· Test of accuracy	20 seconds	(Duration of measurement)
· Casing	*1. Screw type case back is required	
	*2. Non-corresponding with Diver's watch	

*** All specifications are subject to change without notice.**

Version : 1

Appearance - 1

NH35A

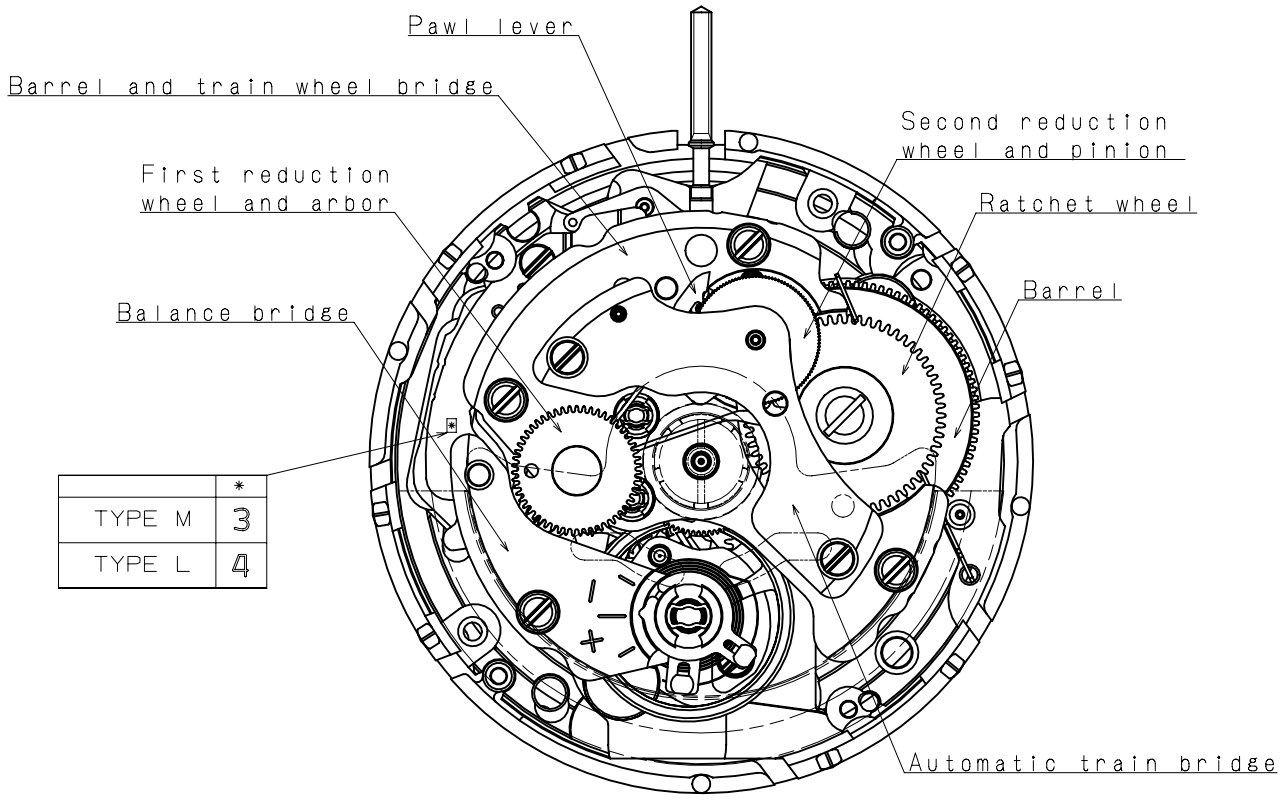

	*
TYPE M	3
TYPE L	4

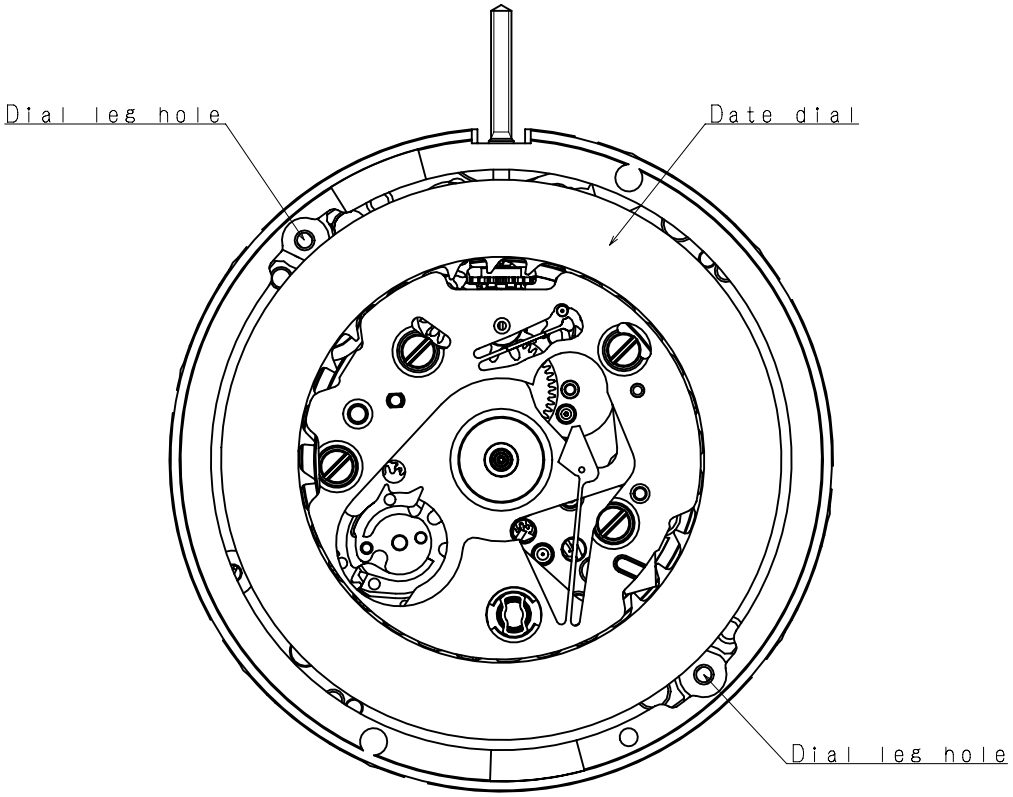

Version : 1

Appearance - 2

Oscillating weight

Marking	Country of origin
JAPAN	JAPAN
MALAYSIA	MALAYSIA

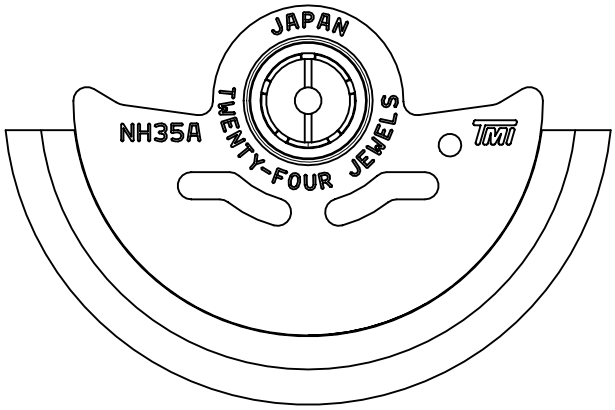

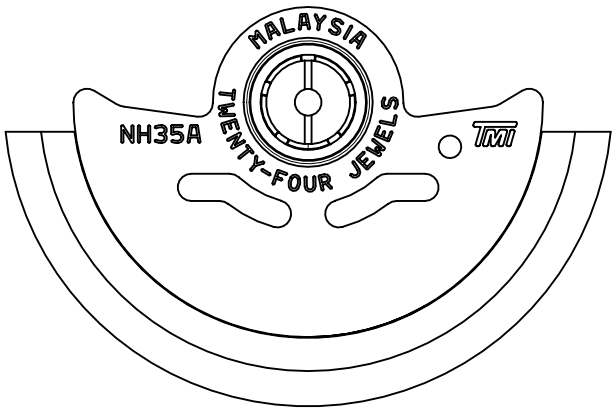

Casing

NH35A

*1. First pull out stroke 39.9

*2. Second pull out stroke 40.0

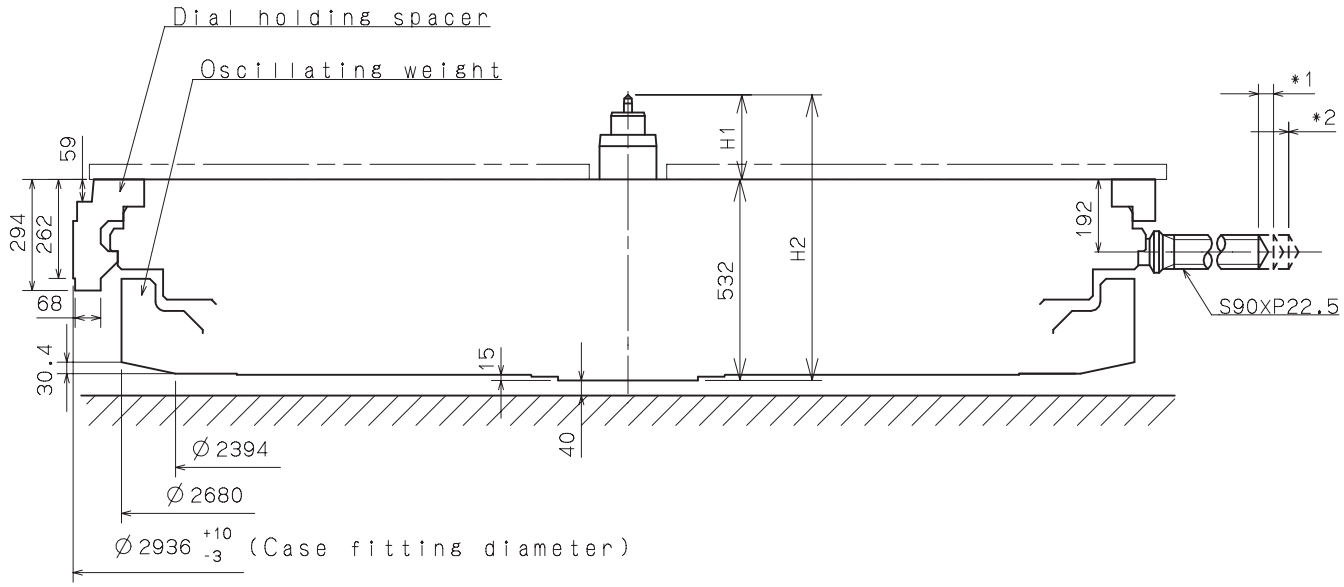

Center post 中心柱位		TYPE M 一般針高	TYPE L 高針
Maximum height from main plate surface 與機芯平面之最大高度	H1	226.7	266.7
Total height incl. movement 機芯總高度	H2	758.7	798.7

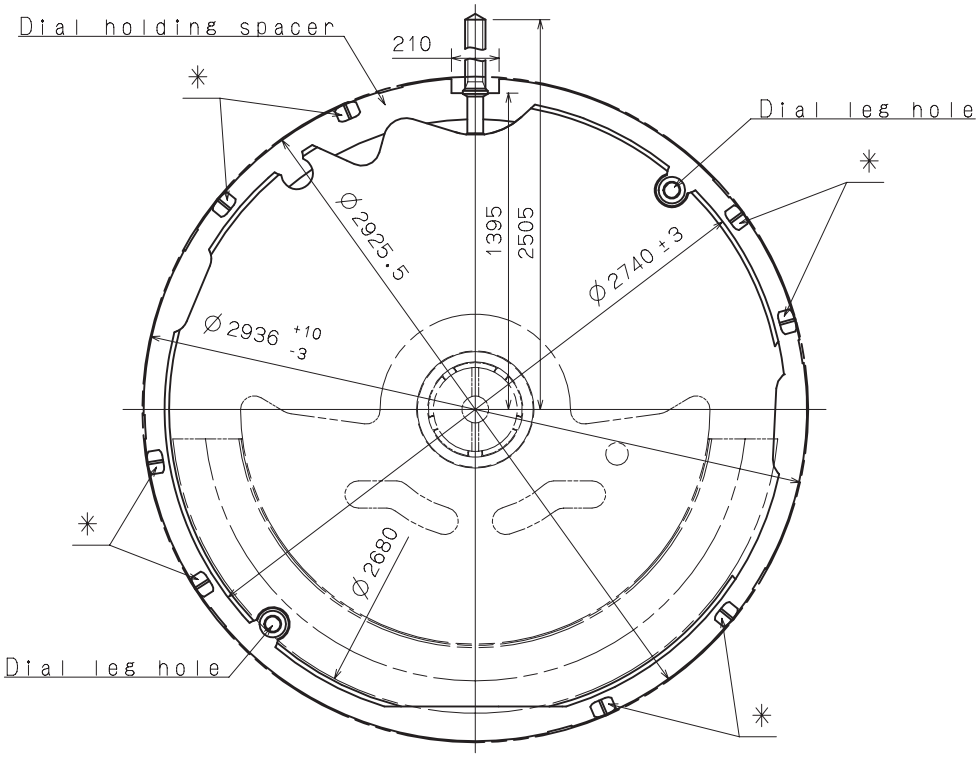

*Projection to fix movement to case.

Unit : 1=1/100mm

Version : 1

Hand Fitting

NH35A

Hour hand unbalance ≦ 1.50μN·m(150mg·mm)
Minute hand unbalance ≦ 1.25μN·m(125mg·mm)
Second hand unbalance ≦ 0.60μN·m(60mg·mm)

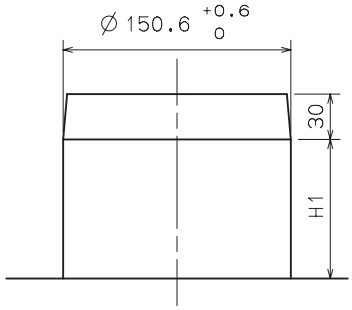

Hour wheel

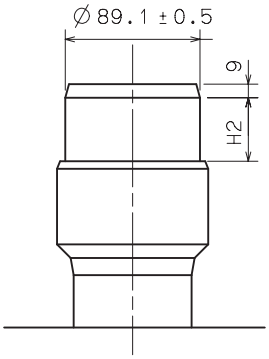

Cannon pinion

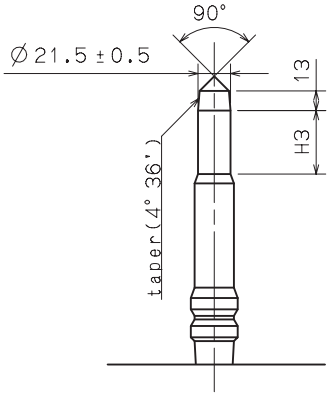

Fourth wheel and pinion

	Part No.			Dimension		
	Hour wheel 時針輪	Cannon pinion 分針輪(十反)	Fourth wheel and pinion 秒針輪	H1	H2	H3
TYPE M 一般針高	0273 182	0225 425	0144 184	88	61	42
TYPE L 高針	0273 184	0225 426	0144 185	128	61	42

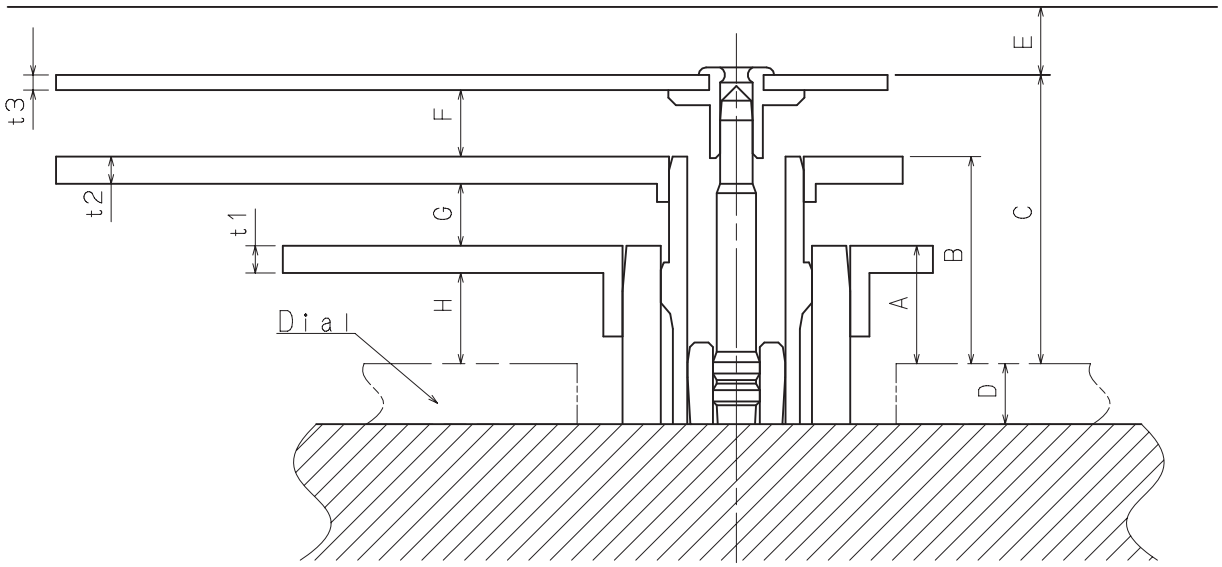

	A	B	C	D	E	F	G	H	t1	t2	t3
TYPE M 一般針高	78	137	191	40	45	44	41	60	18	18	10
TYPE L 高針	118	177	231	40	45	44	41	100	18	18	10

Unit : 1=1/100mm

Version : 1

Hand Setting Stem

NH35A

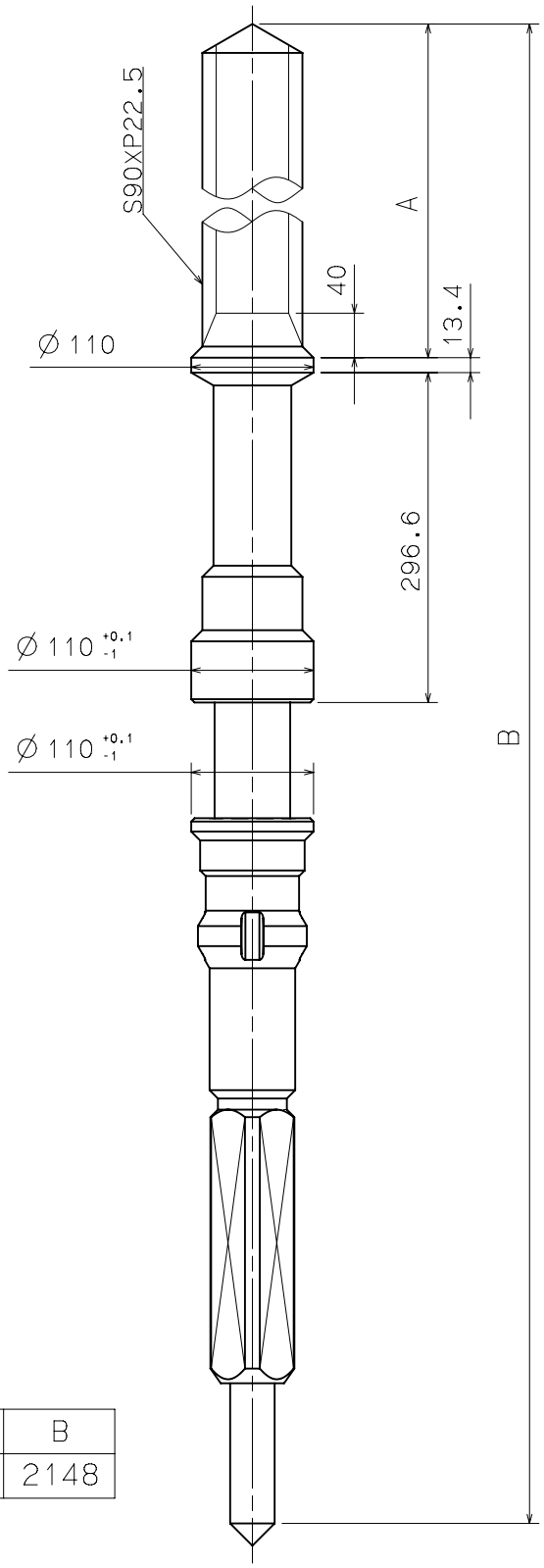

Part No.	A	B
0351 200	1100	2148

Unit : 1=1/100mm

Version : 1

Dial - 1

NH35A

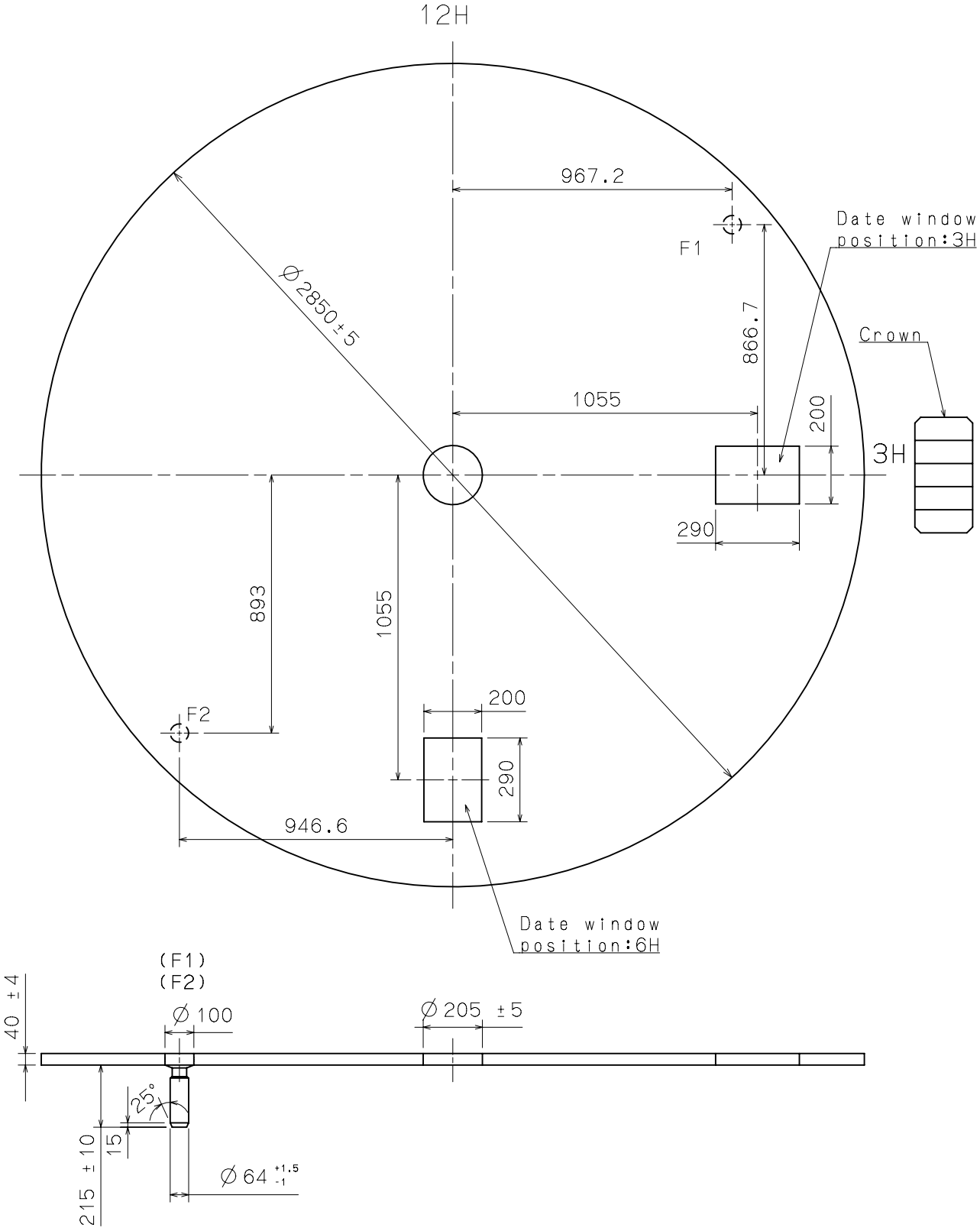

Unit : 1=1/100mm

Version : 1

Dial - 2

NH35A

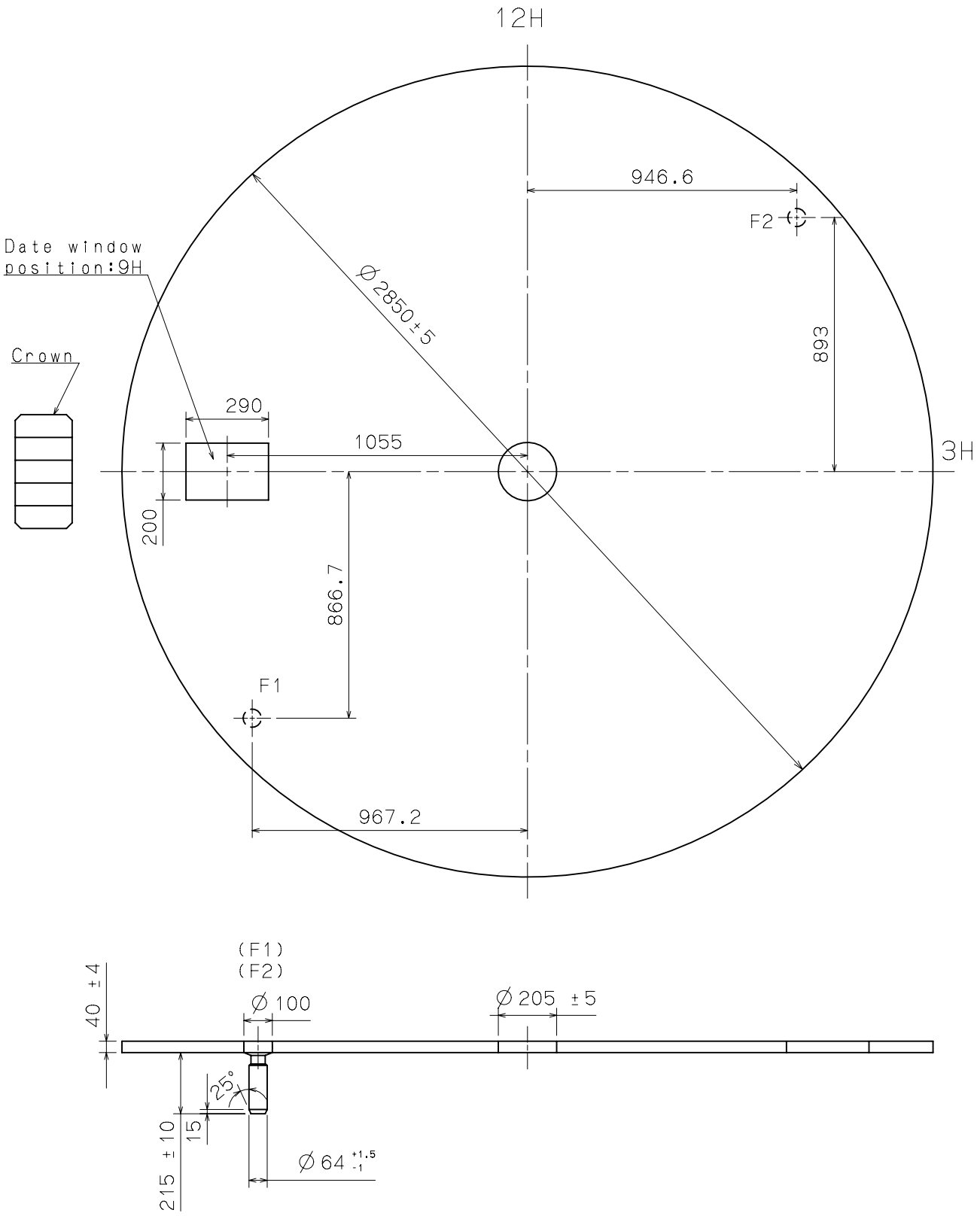

Unit : 1=1/100mm

Version : 1

Assembly Plan

NH35A

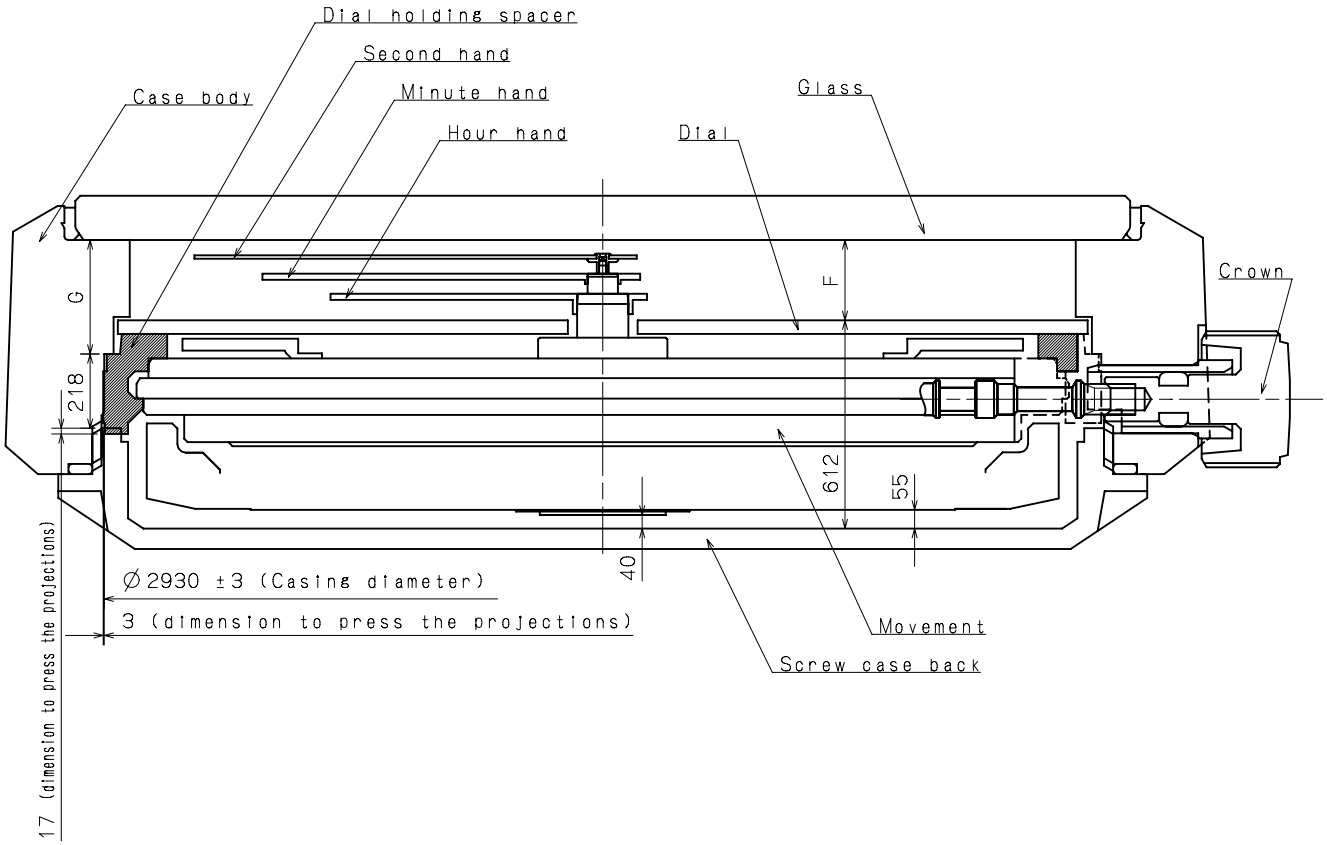

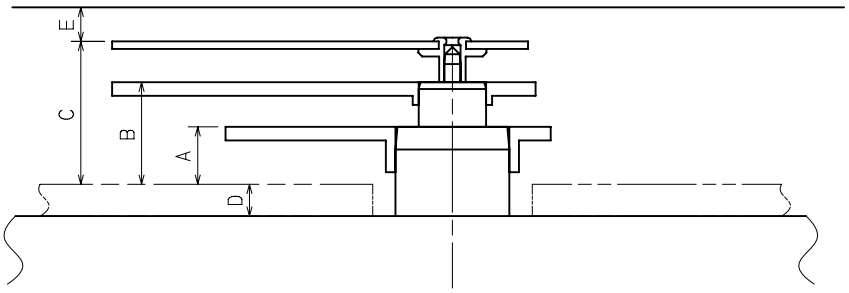

	A	B	C	D	E	F	G
TYPE M	78	137	191	40	45	236	335
TYPE L	118	177	231	40	45	276	375

Unit : 1=1/100mm

Version : 1

Hands

NH35A

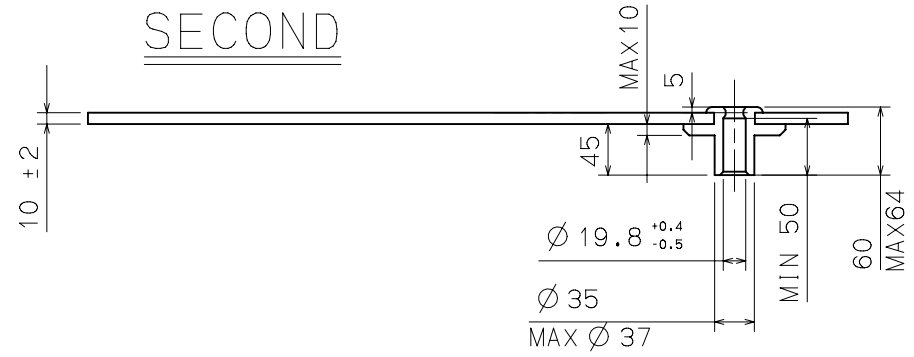

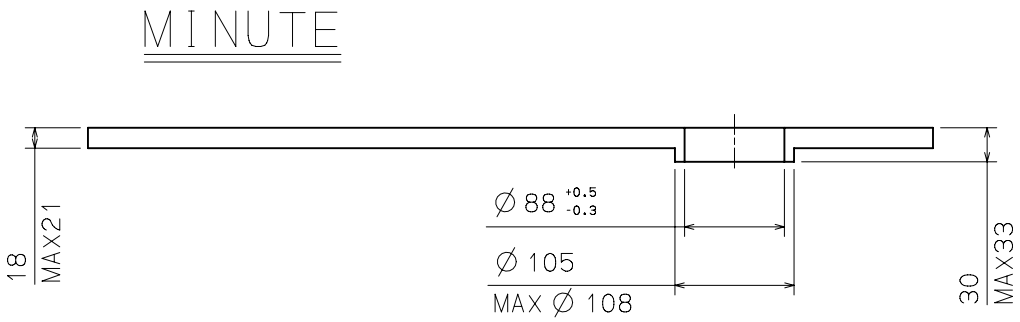

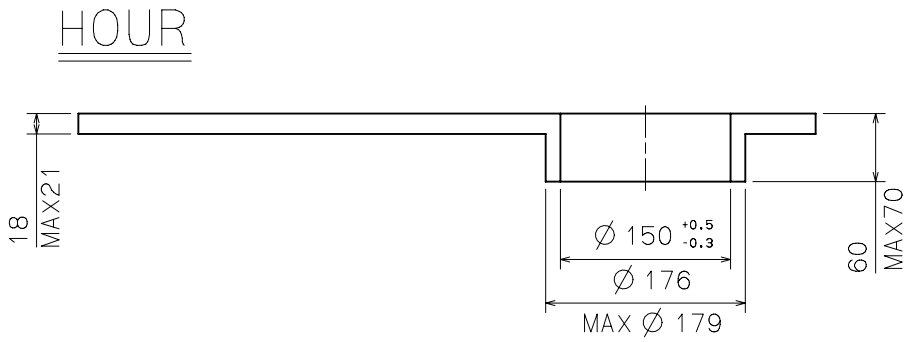

Unit : 1=1/100mm

Version : 1